RUCT + GUC11S-V0

- 35 mm rail mount acc. to EN 60715
- Compliance with standards: EN 45545-2 (category EL10, requirement R26 - flammability class V-0 acc. to EN 60695-11-10); EN 61373 category 1, class B (mechanical shock and vibration resistance); EN 50155; EN 60077-1; EN 61810-1
- Recognitions, certifications, directives: recognitions RUCT, RoHS,

Contact data

Number and type of contacts		3 CO, 3 NO
Contact material		**AgNi**
Rated / max. switching voltage	AC	230 V / 250 V
Min. switching voltage		5 V
Rated load	AC1	16 A / 250 V AC
	DC1	16 A / 24 V DC (see Fig. 3)
Min. switching current		5 mA
Max. inrush current		40 A
Rated current		16 A
Max. breaking capacity	AC1	4 000 VA
Min. breaking capacity		0,3 W
Contact resistance		≤ 100 mΩ
Max. operating frequency		
• at rated load	AC1	1 200 cycles/hour
• no load		12 000 cycles/hour

Coil data

Rated voltage	DC	**24**, 110 V ❶
Must release voltage		≥ 0,1 U_n
Operating range of supply voltage		0,7...1,25 U_n EN 50155 see Table 1
Must operate voltage		≤ 0,7 U_n
Rated power consumption	DC	1,7 W reinforced version

Insulation according to EN 60664-1

Insulation rated voltage		250 V AC
Rated surge voltage		4 000 V 1,2 / 50 µs
Overvoltage category		III
Insulation pollution degree		2
Flammability class		V-0 UL 94, EN 60695-11-10
Dielectric strength		
• between coil and contacts		2 500 V AC type of insulation: basic
• contact clearance		1 500 V AC type of clearance: micro-disconnection with contact gap ≥ 0,4 mm
• pole - pole		2 500 V AC type of insulation: basic
Contact - coil distance	• clearance	≥ 4 mm
	• creepage	≥ 5 mm
Pole - pole distance	• clearance	≥ 6,3 mm
	• creepage	≥ 8 mm

General data

Operating / release time	• typical values	20 ms / 15 ms
	• max. values	25 ms / 20 ms
Electrical life		
• resistive AC1		> 10^5 16 A, 250 V AC
• cosφ		see Fig. 2
Mechanical life (cycles)		> 10^7
Dimensions (L x W x H)		84,5 x 41,5 x 77,3 mm
Weight		162 g
Ambient temperature (non-condensation and/or icing)	• storage	-40...+85 °C
	• operating	-40...+55 °C
Cover protection category		IP 00 EN 60529
Environmental protection		RTI EN 61810-7
Shock / vibration resistance		category 1, class B EN 61373 (set: relay in socket with clip)

The data in bold type relate to the standard versions of the relays.
❶ For other voltages, please contact Relpol S.A.

23.12.2020

Electrical life at AC resistive load.
Switching frequency: 1 200 cycles/hour Fig. 1

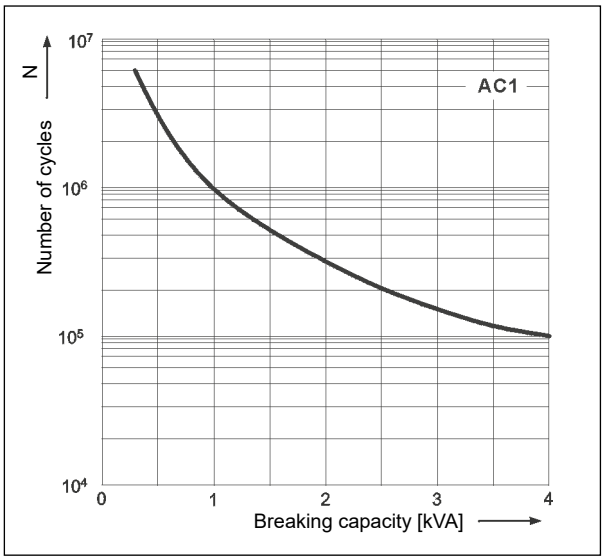

Electrical life reduction factor
at AC inductive load Fig. 2

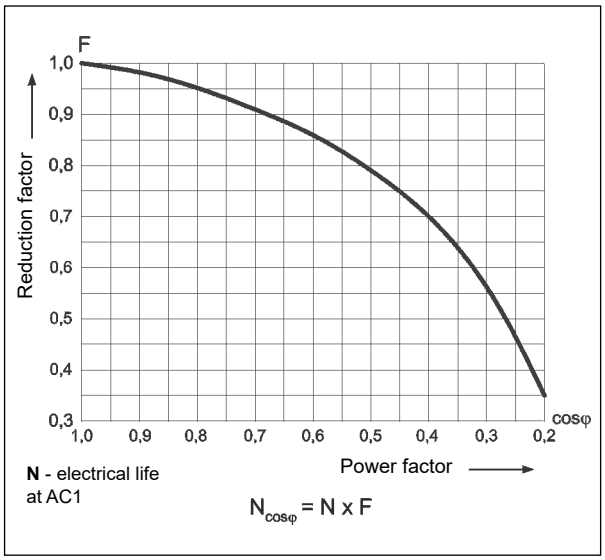

Max. DC breaking capacity
A - resistive load DC1
B - inductive load L/R = 40 ms Fig. 3

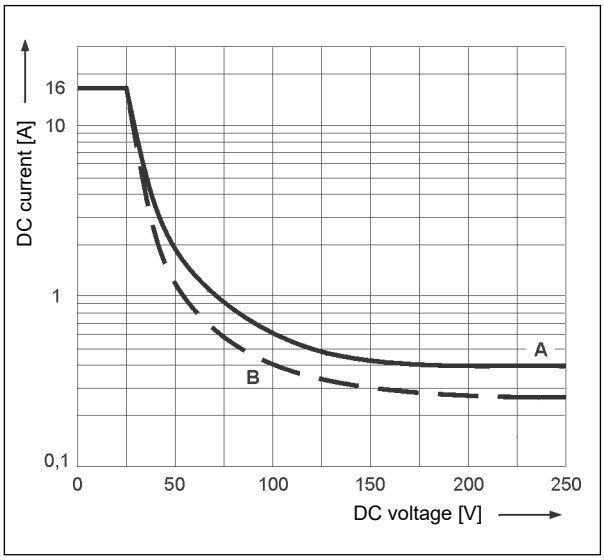

Dimensions

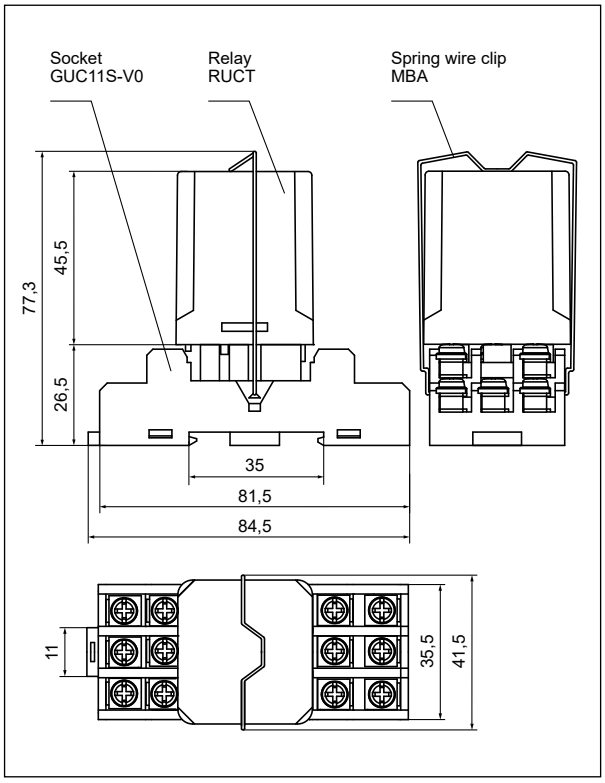

Relays for
railroad industry
- industrial

RUCT

RUCT-M

23.12.2020

Connection diagrams
(screw terminals side view)

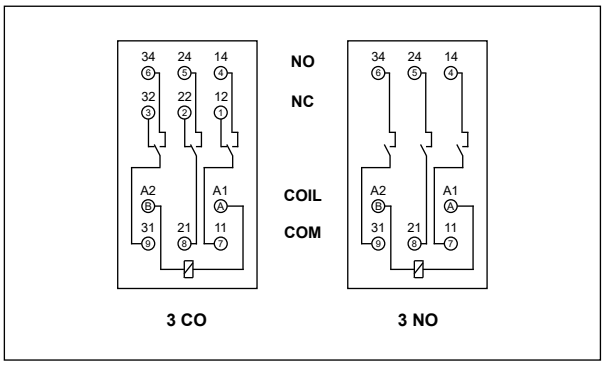

Mounting

Relays **PRUCT with socket GUC11S-V0** are designed for direct mounting on 35 mm rail mount acc. to EN 60715. **Connections:** max. cross section of the cables (stranded): 2 x 2,5 mm² (2 x 14 AWG), stripping length: 9 mm, max. tightening moment for the terminal: 0,7 Nm.

Coil data - DC voltage version

Table 1

Coil code	Rated voltage V DC ❶	Coil resistance at 20 °C Ω	Acceptable resistance	Coil operating range V DC according to EN 50155 ❷	
				min.	max.
W024	**24**	**345**	**± 10%**	**16,8**	**30,0**
W110	110	7 300	± 10%	77,0	137,5

The data in bold type relate to the standard versions of the relays. ❶ For other voltages, please contact Relpol S.A. ❷ Changes of voltage within the range 0,6...1,4 Un below 0,1 s and changes of voltage within the range 1,25...1,4 Un below 1 s are admissible and they do not distort operation of the relays.

Ordering codes

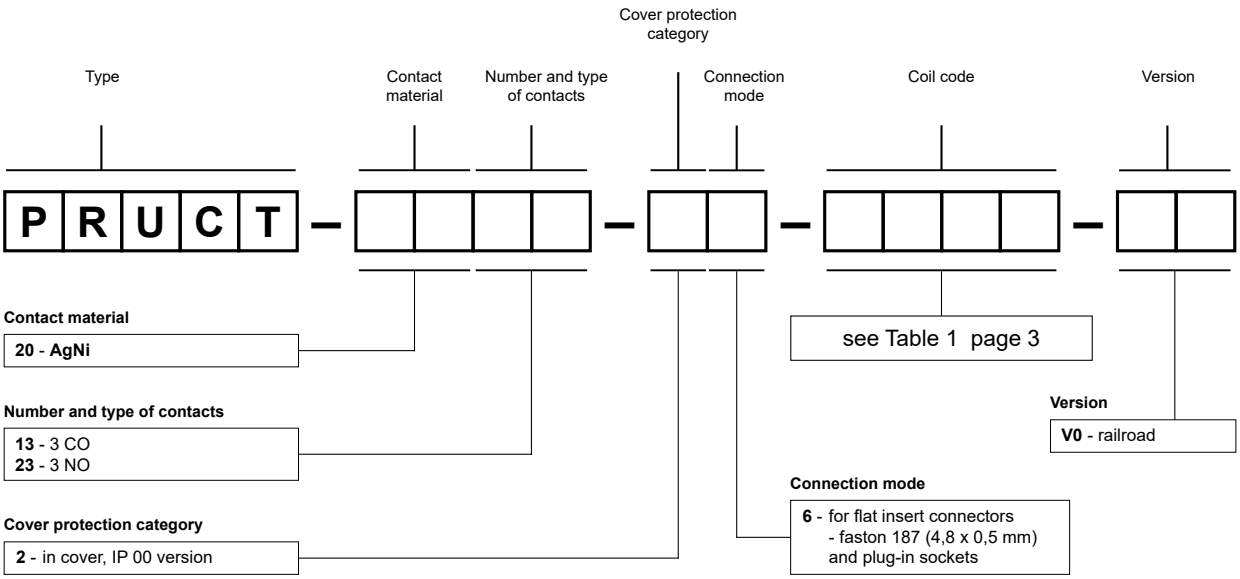

Examples of ordering codes:

PRUCT-2013-26-W024-V0 interface relay **PRUCT** (railroad version) consists of: relay **RUCT** (three change-over contacts, contact material AgNi, reinforced coil voltage 24 V DC), socket **GUC11S-V0** (grey, screw terminals), spring wire clip **MBA**

PRUCT-2023-26-W110-V0 interface relay **PRUCT** (railroad version) consists of: relay **RUCT** (three normally open contacts, contact material AgNi, reinforced coil voltage 110 V DC), socket **GUC11S-V0** (grey, screw terminals), spring wire clip **MBA**

PRECAUTIONS:

1. Ensure that the parameters of the product described in its specification provide a safety margin for the appropriate operation of the device or system and never use the product in circumstances which exceed the parameters of the product. **2.** Never touch any live parts of the device. **3.** Ensure that the product has been connected correctly. An incorrect connection may cause malfunction, excessive heating or risk of fire. **4.** In case of any risk of any serious material loss or death or injuries of humans or animals, the devices or systems shall be designed so to equip them with double safety system to guarantee their reliable operation.